THESE DRAWINGS AND SPECIFICATIONS ARE THE PROPERTY OF DEEP LIFE LTD. AND SHALL NOT BE REPRODUCED, COPIED, OR USED AS THE BASIS FOR THE MANUFACTURE, OR SALE OF APPARATUS WITHOUT THE WRITTEN PERMISSION OF DEEP LIFE LTD.

REVISIONS

REV	DESCRIPTION	DATE	APPD

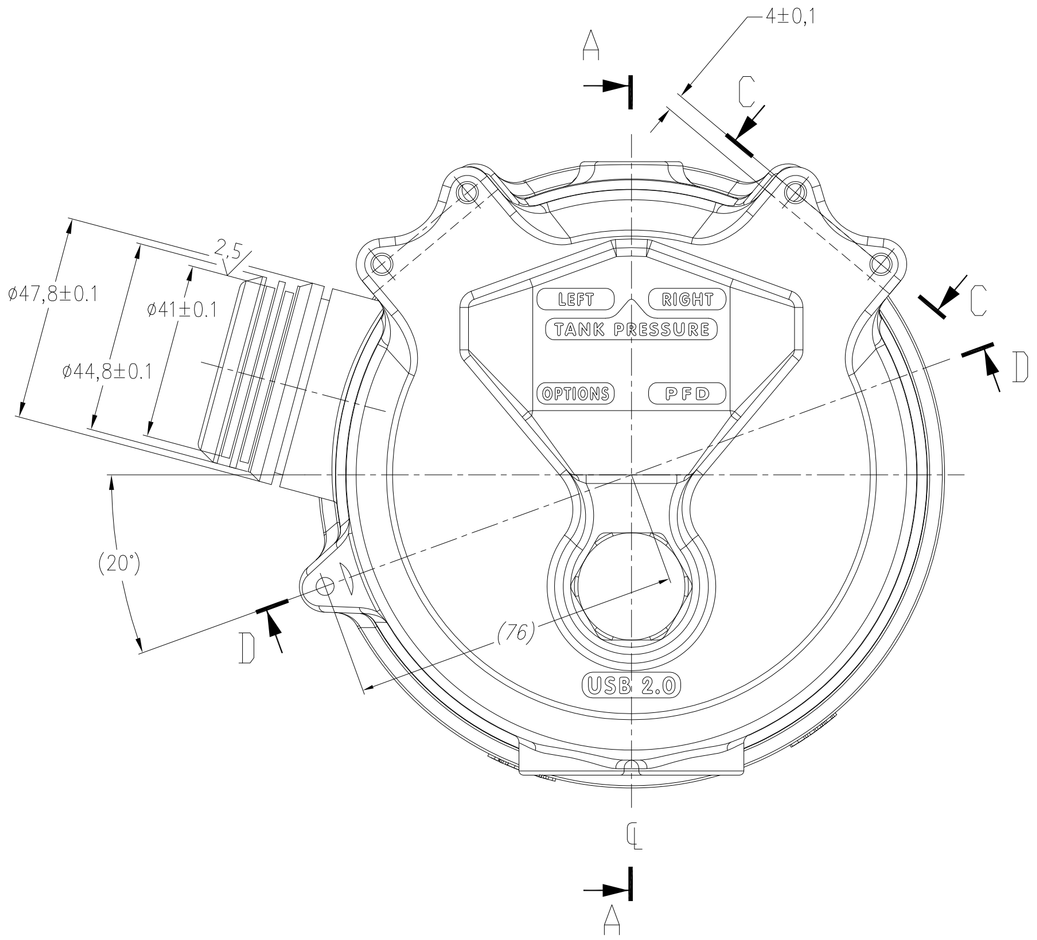

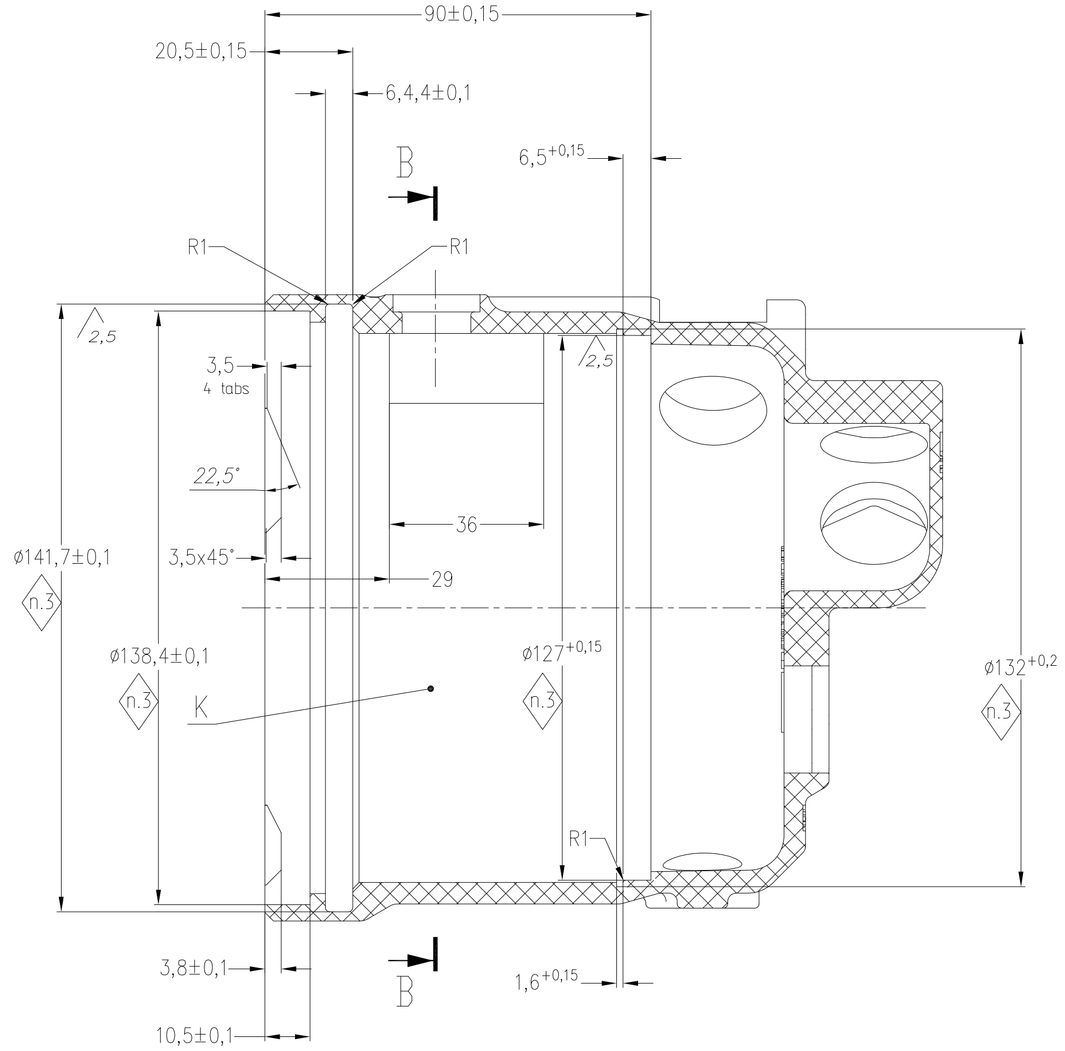

SECTION A–A

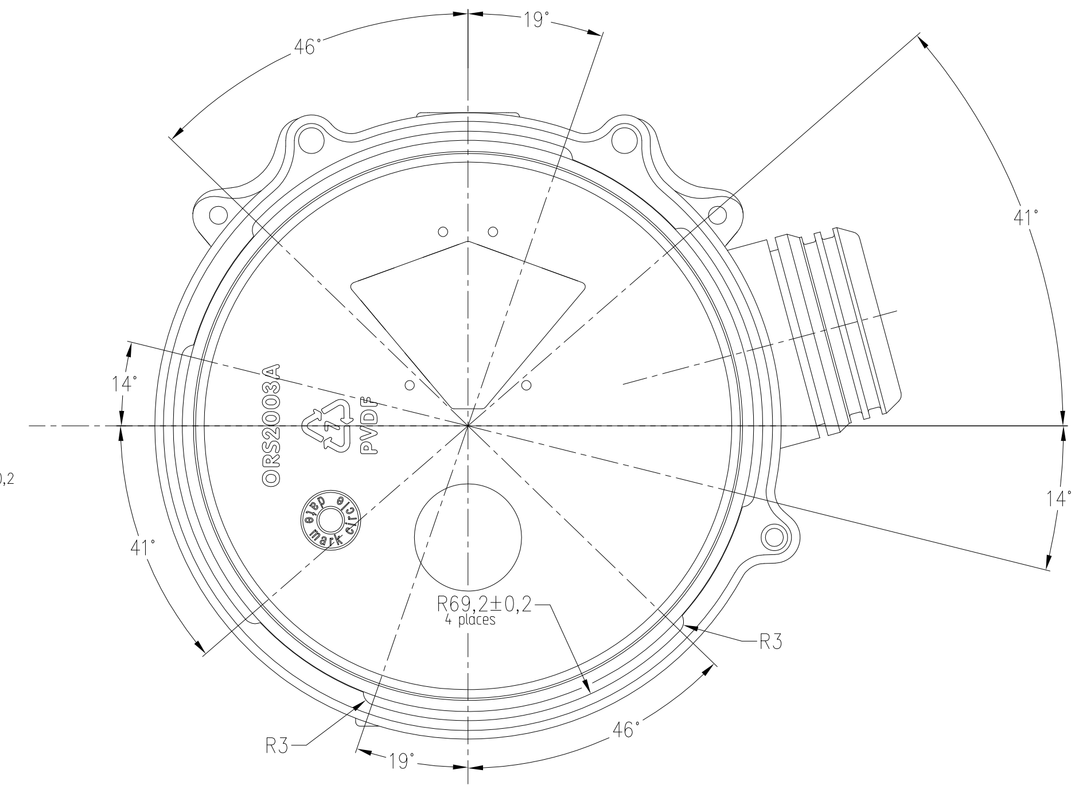

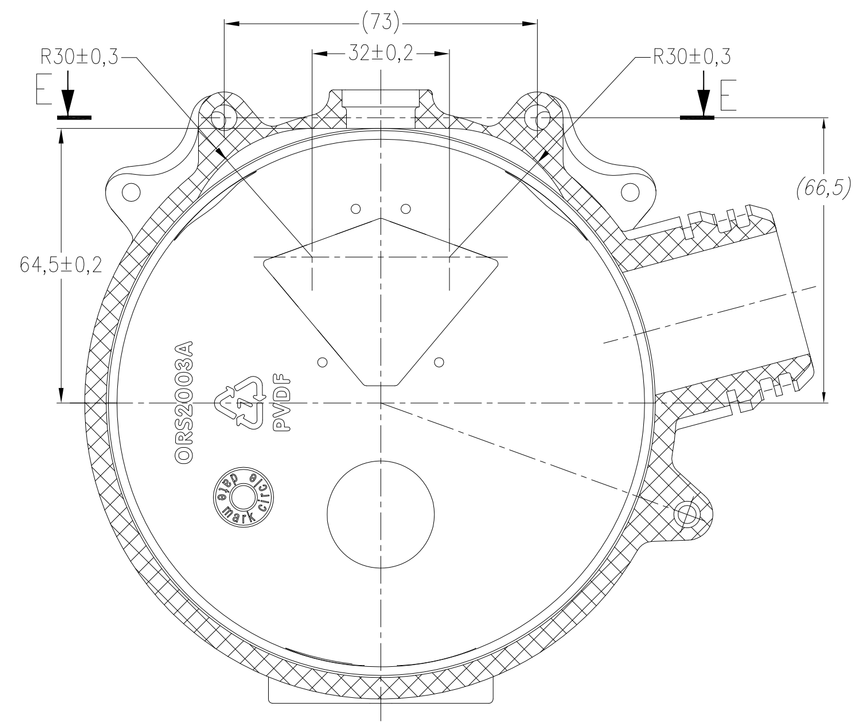

SECTION B–B

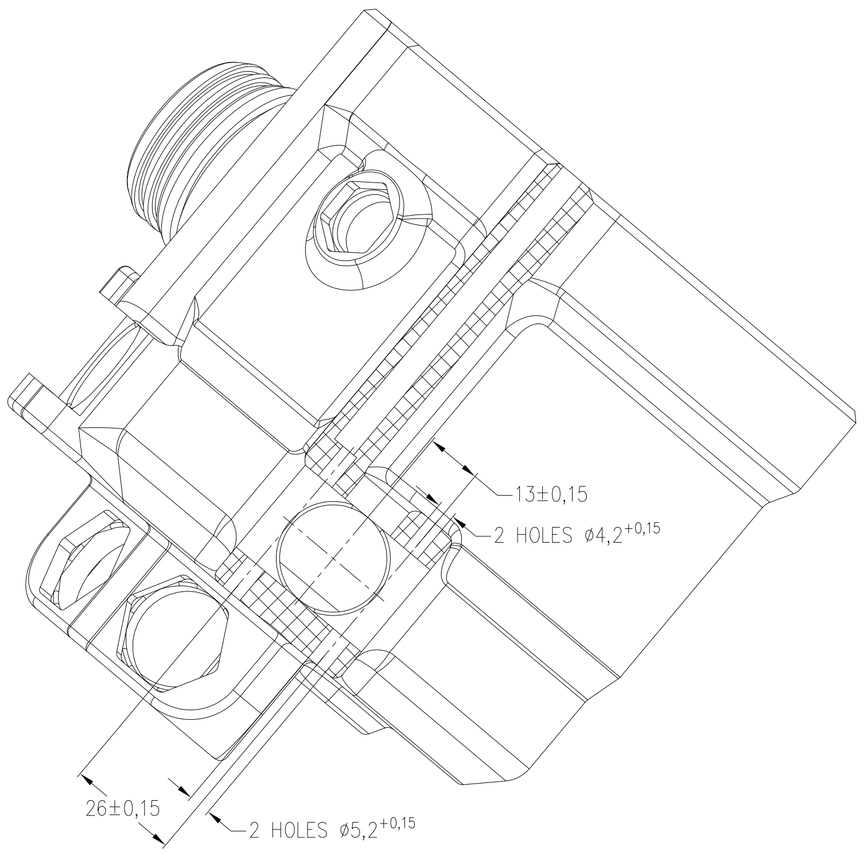

SECTION C–C

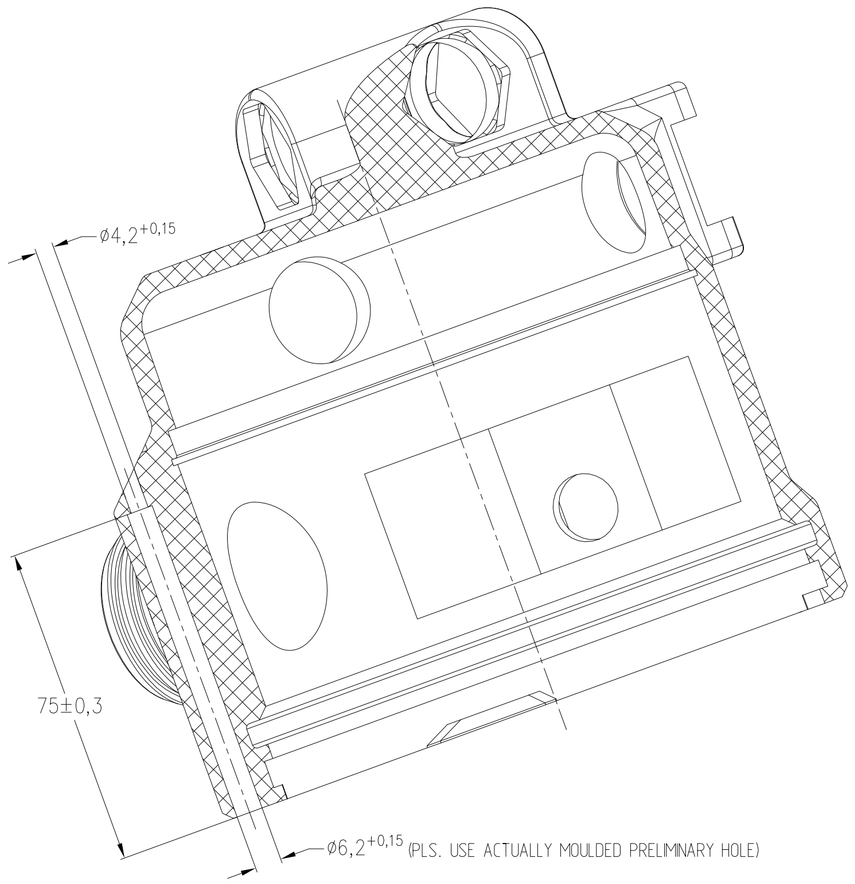

SECTION D–D

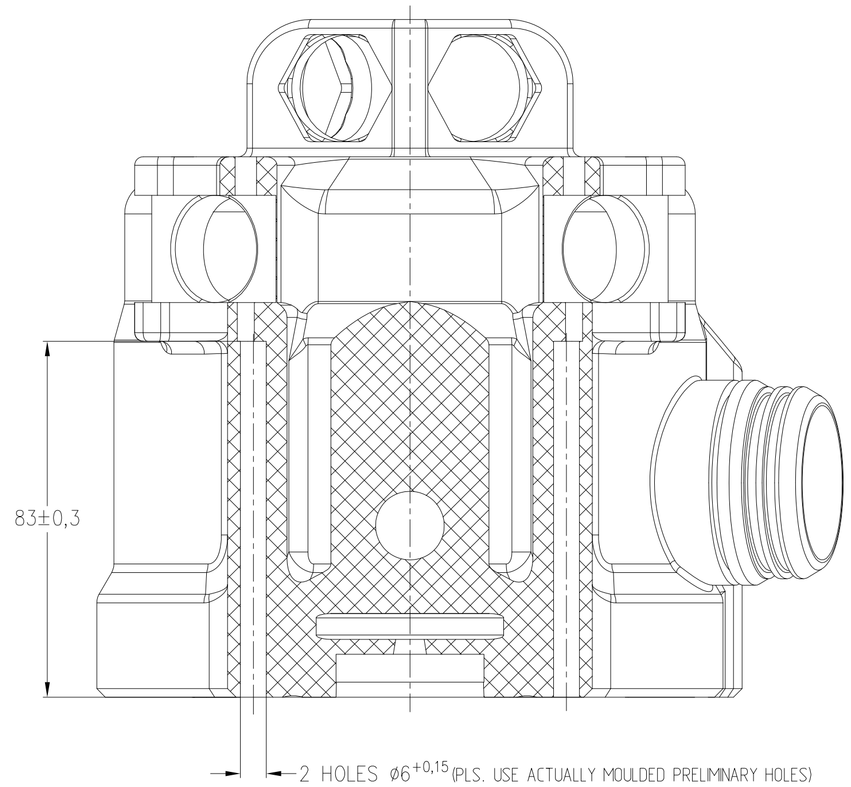

SECTION E–E

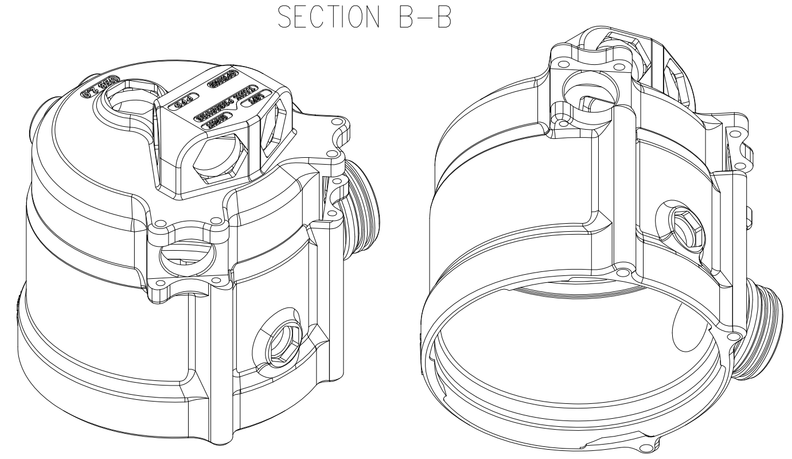

NOTES:

n1. UNDEFINED PART GEOMETRY AS PER 3D MODEL <ORS2003A5.X-B>

n2. UNDEFINED CORNER RADII R0.3mm MAX ARE ALLOWED

n.3 RADIAL RUNOUT OF THE INDICATED DIAMETERS NOT MORE THAN 0.15 MM WITH RESPECT TO THE AXIS OF THE ACTUALLY MOULDED SURFACE 'K'

n4. REMOVE SHARP EDGES AND BURRS

UNLESS OTHERWISE SPECIFIED:
DIMENSIONS ARE IN MM
FIRST ANGLE PROJECTION
TOLERANCES IN ACCORDANCE WITH ISO:
SHAFTS h12, HOLES H12, OTHERS (+/-JT12/2

NEXT ASSY:
ORS2000
Assy of SRB Top Cap

	NAME	DATE
DRN	A.Bogachev	16–06–08
CHK	S.Belousov	18–06–08
ENG		
MFG		

MATERIAL: ORS2003MB–A5 (BLACK PP)

FINISH: 6.3um MAX SURFACE ROUGHNESS UNLESS OTHERWISE SPECIFIED

DEEP LIFE LTD.

TITLE: SRB Top Cap

SIZE: ISO A1 | DWG NUMBER: ORS2003 | REV. A5

SCALE 1:1 | SHEET 1 OF 1

FILE NAME: ORS2003A5.dwg